35 YEARS OF PERFORMANCE MANAGEMENT

Introduction to z17 Channel Performance Management

Tyler Rossi
Software Engineer / Performance Apprentice
tyler@velocitysoftware.com

VELOCITY SOFTWARE

Copyright 2026 Velocity Software, Inc. All Rights Reserved.
Other products and company names mentioned herein may be trademarks of their respective owners.

PROVEN PERFORMANCE

Uh oh, there are Channel problems…

Topics

Channel Fundamentals Introduction

- What is a Channel?
- What is an I/O Adapter?
- Common I/O Adapters

z17 Channel Architecture Changes

- Network Express Adapter
- FICON Express32-4P Adapter
- Data Processing Unit (DPU)

z17 Channel Performance Analysis

- Basis of Channel Performance Analysis
- z17 Channel Components/Metrics

Channel Fundamentals Introduction

What is a Channel?

IO related Systems

- Mainframe (Physical)
  - IO Adapters
  - SAPs
  - DPUs
  - PCIEs
- External Network Infrastructure
  - LANs
  - WANs
  - SANs
- Virtual Network
  - Hipersockets/VNICs
  - VSwitch/Guest LANs
- TCP/IP

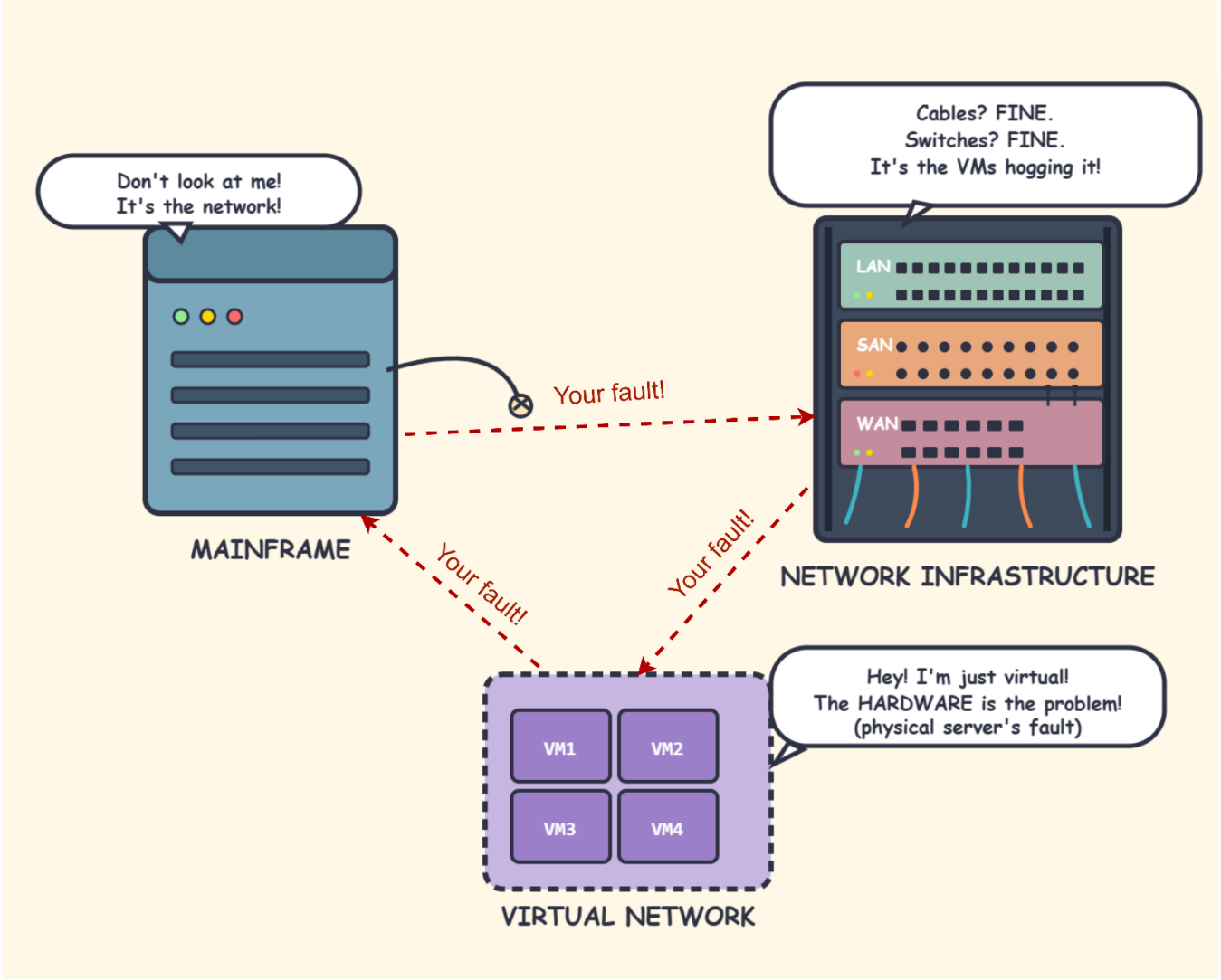

What is a Channel?

IO related Systems

- Mainframe (Physical)
  - IO Adapters
  - SAPs
  - DPUs
  - PCIEs
- External Network Infrastructure
  - LANs
  - WANs
  - SANs
- Virtual Network
  - Hipersockets/VNICs
  - VSwitch/Guest LANs
- TCP/IP

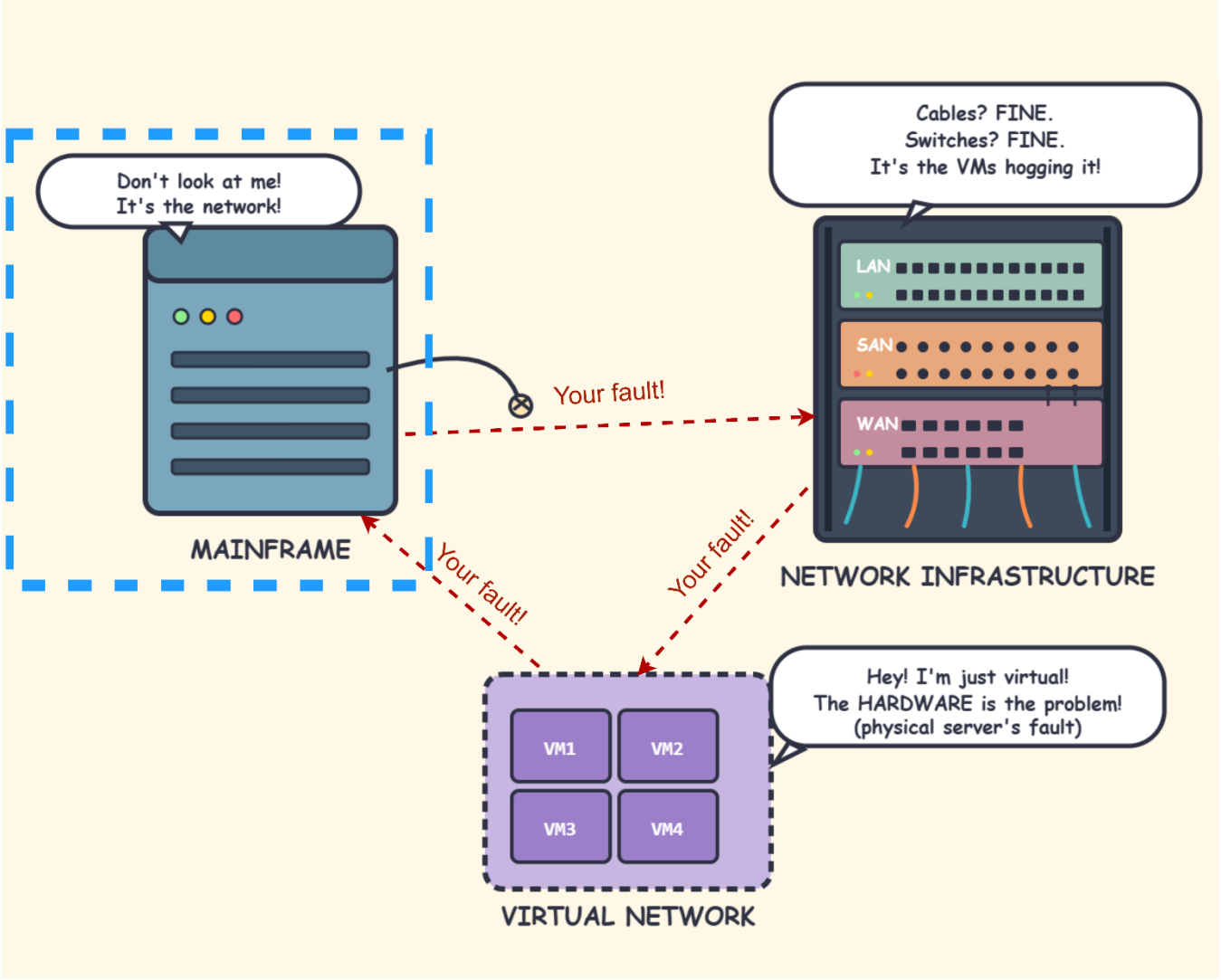

What is a Channel?

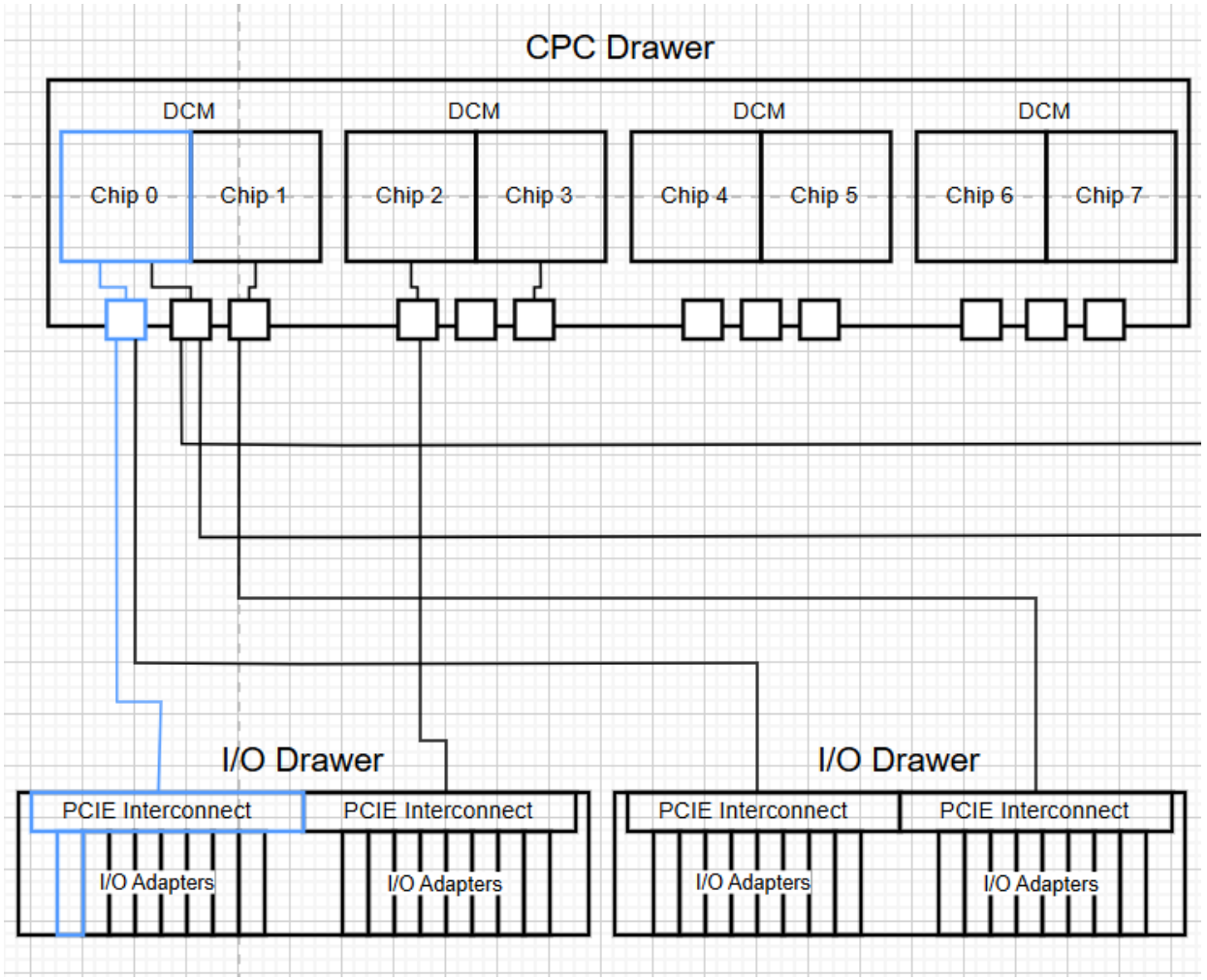

Sample z16 drawer configuration

- **Channel -** a single I/O interface between a channel subsystem (on chip) and one or more control units

Note: FICON channels technically include some components outside of the box however this does not have a large effect on channel performance management

What is an I/O Adapter?

I/O adapter – A mechanism for connecting two unlike parts or machines (z/OS Communications Server Glossary)

Typical use cases of I/O adapters on the mainframe

- Mainframe to Mainframe
- Mainframe to Storage Area Network
- Mainframe to Local/Wide Area Network

In the context of performance management, why do they matter?

- Different types of I/O adapter and their modes often have their own caveats when it comes to performance management

Common I/O Adapters

FICON Express – Adapters which use fibre connections to connect to Storage Units, Storage Area Networks (SAN), tape, and other mainframes. Operates using one of two modes:

- **Fibre Channel Native (FICON)** – Operating in mode allowing it to interface with devices using ECKD-format storage, FICON-attached tape, and FICON channel-to-channel (FCTC) connections. May be configured to have some operations use the zHPF protocol
- **Fibre Channel Protocol (FCP)** – Operating in mode allowing it to interface with fixed block SCSI storage devices and FCP-attached tape libraries. Uses the QDIO architecture

FICON Express 32-4P

Common I/O Adapters

OSA Express – Adapters which use ethernet cables to connect to LANs/WANS or other partitions on the same system. Operates using either:

- **QDIO mode**
- **Non-QDIO mode**

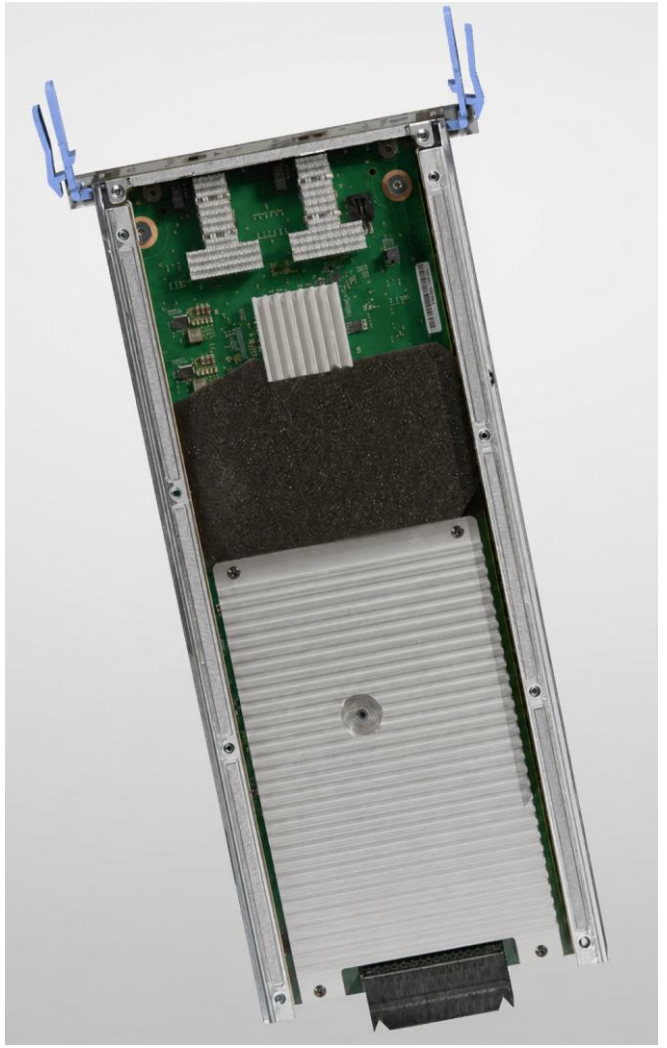

OSA Express 7s 1.2

Common I/O Adapters

RoCE Express – Adapters allowing for Host-to-host connection between two OS images for RDMA-accelerated TCP traffic (via SMC-R). Utilizes RoCE adapters.

Note: The RoCE does not following traditional channel architecture and in fact there are no channels associated with RoCE cards

RoCE Express3

Common I/O Adapters

Network Express – Adapter which can operate in 1 or both of the following modes :

- **OSH** mode giving it the same functionality as OSA Express adapters. Uses the EQDIO architecture.
- **NETH** has the same functionality as RoCE Express adapters

Note: Much like the RoCE card the Network Express operating in NETH mode does not use traditional channel architecture

Network Express

z17 Channel Architecture Changes

Network Express Adapter

Overview

- ASICs removed
- I/O Processing is performed on the Data Processing Unit (DPU) rather than the ASIC

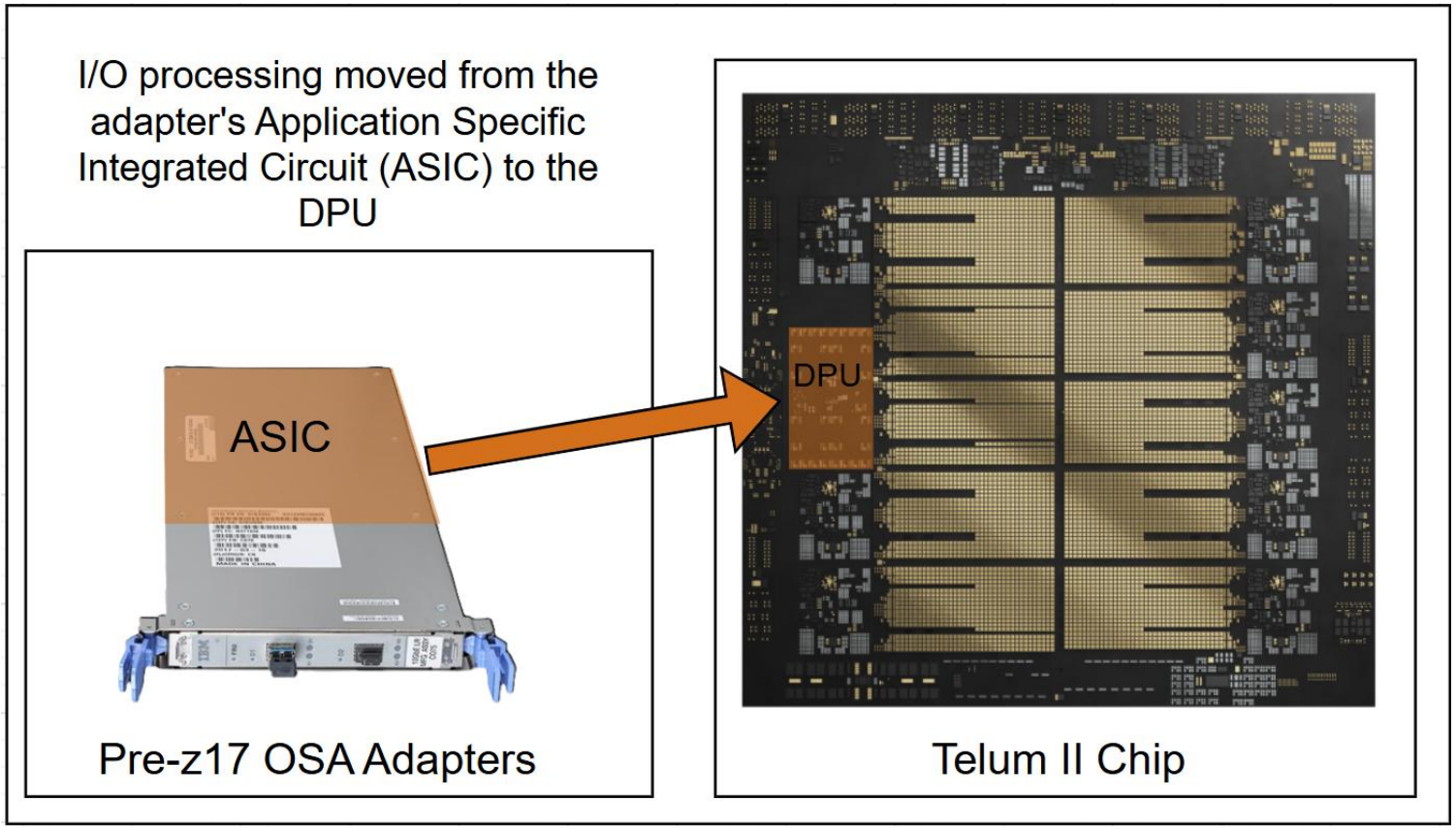

FICON Express 32-4P Adapter

Overview

- Same Functionality as older FICON adapters
- ASICs removed
- I/O Processing is performed on the DPU rather than the ASIC

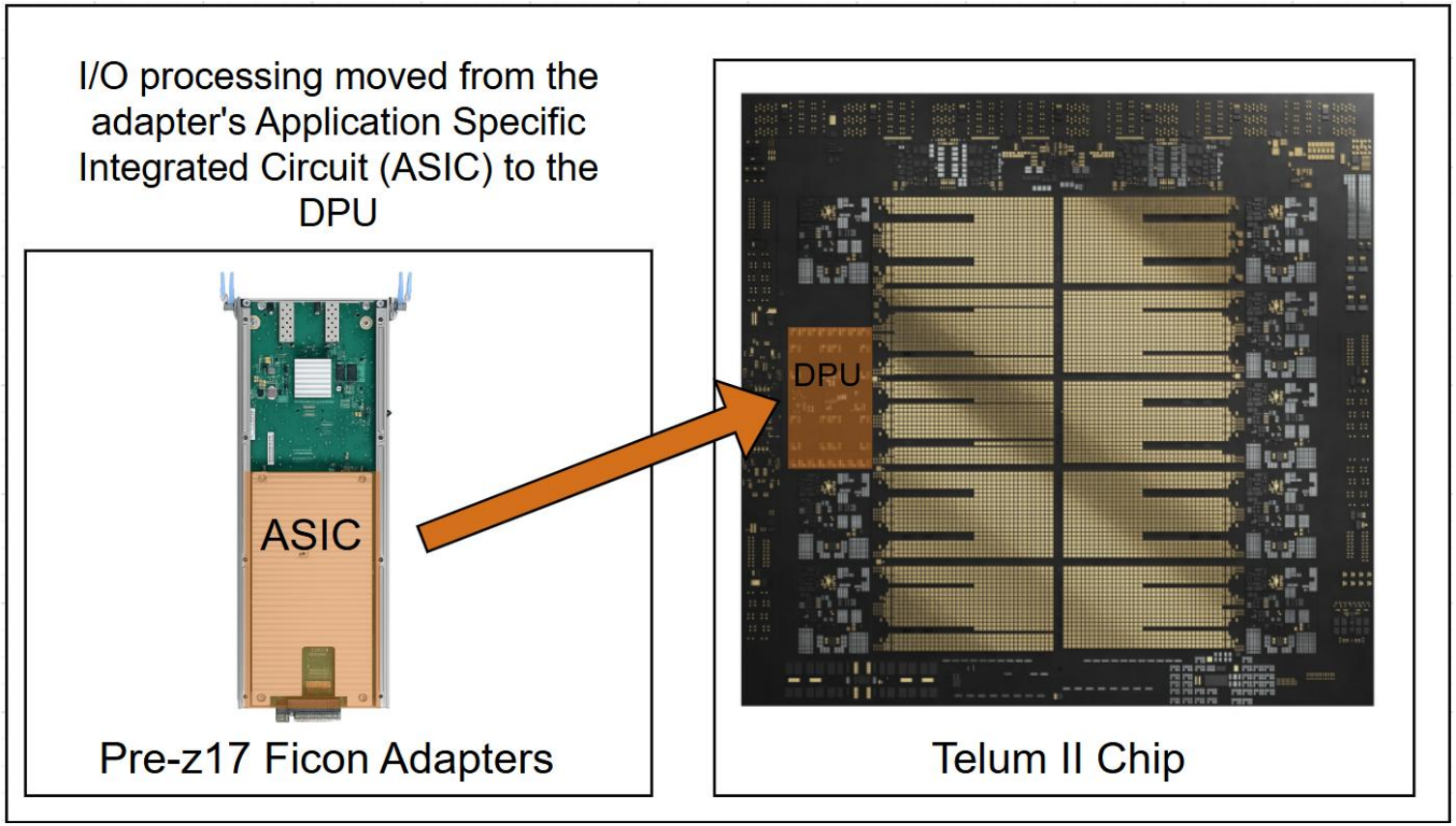

Pre-z17 I/O Processing Architecture

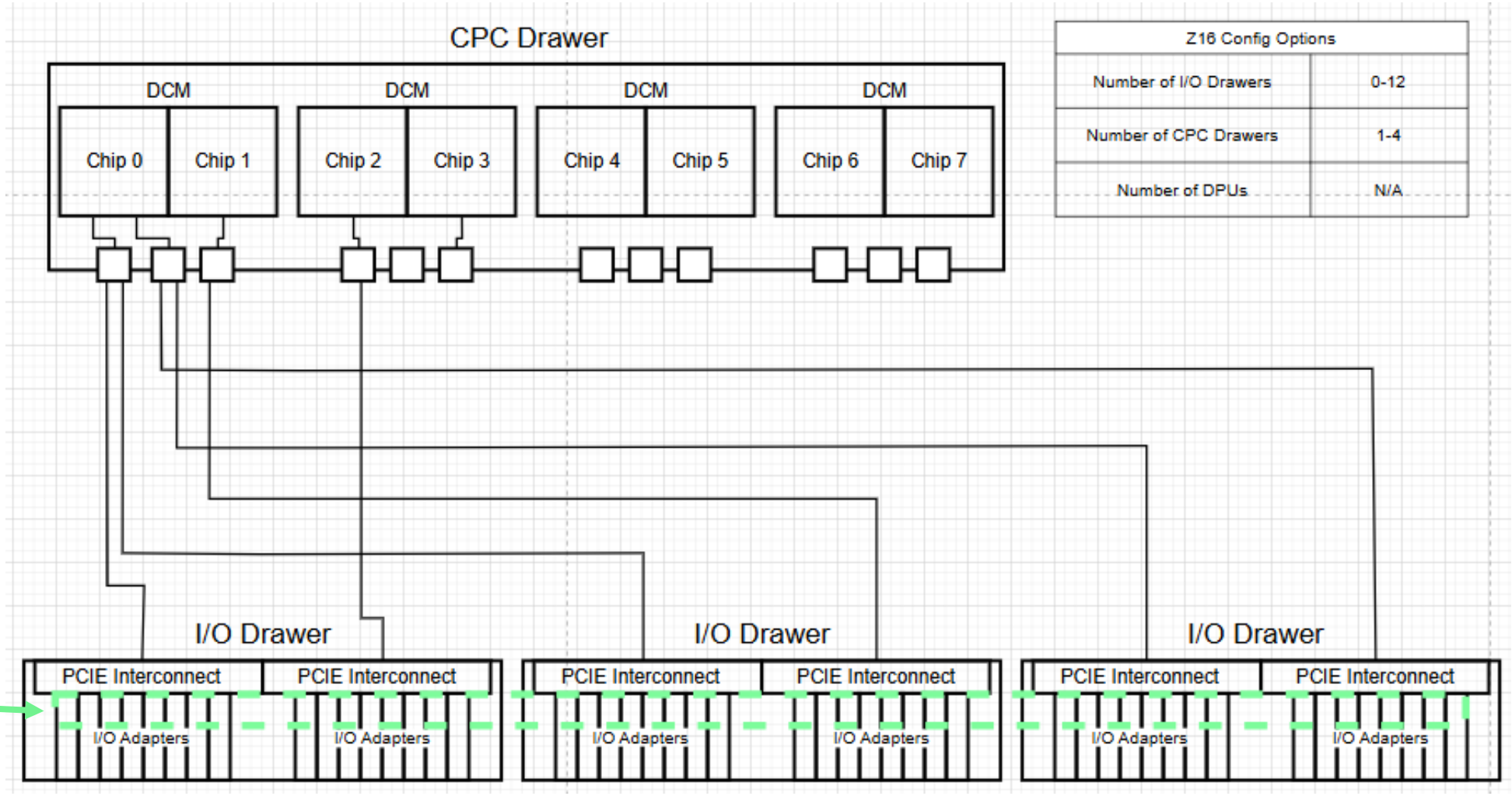

Sample z16 I/O drawer Configuration

Post-z17 I/O Processing

DPU

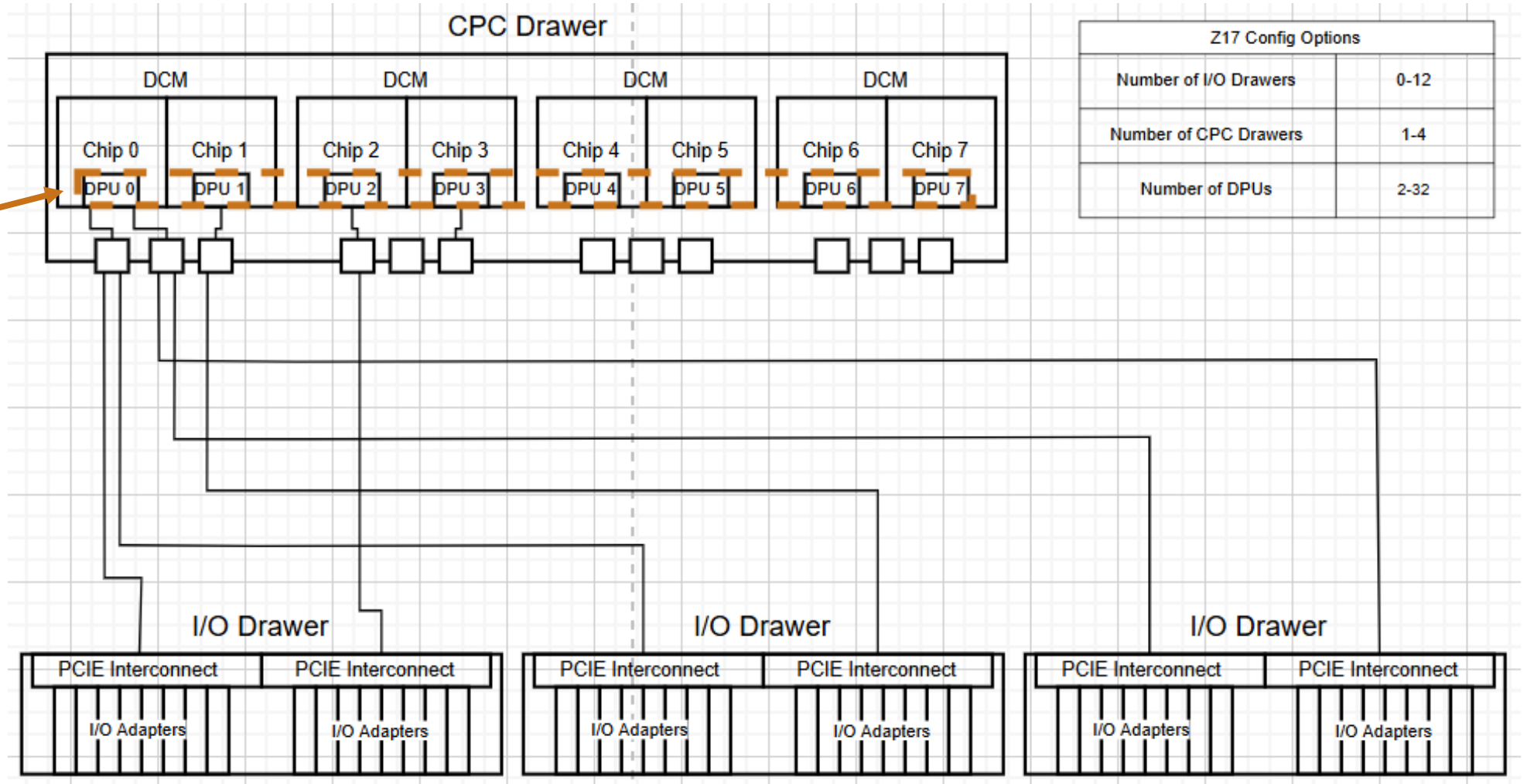

Z17 Config Options	
Number of I/O Drawers	0-12
Number of CPC Drawers	1-4
Number of DPUs	2-32

Sample z17 I/O drawer Configuration

35 YEARS OF PERFORMANCE MANAGEMENT

z17 Channel Performance Analysis

Basis of Channel Performance Analysis

Channels utilize a pipeline of hardware components

Data can only travel as fast as the slowest component

Channel performance analysis is based of understanding each of these components and finding which components are/will be bottleneck

z17 Channel Components

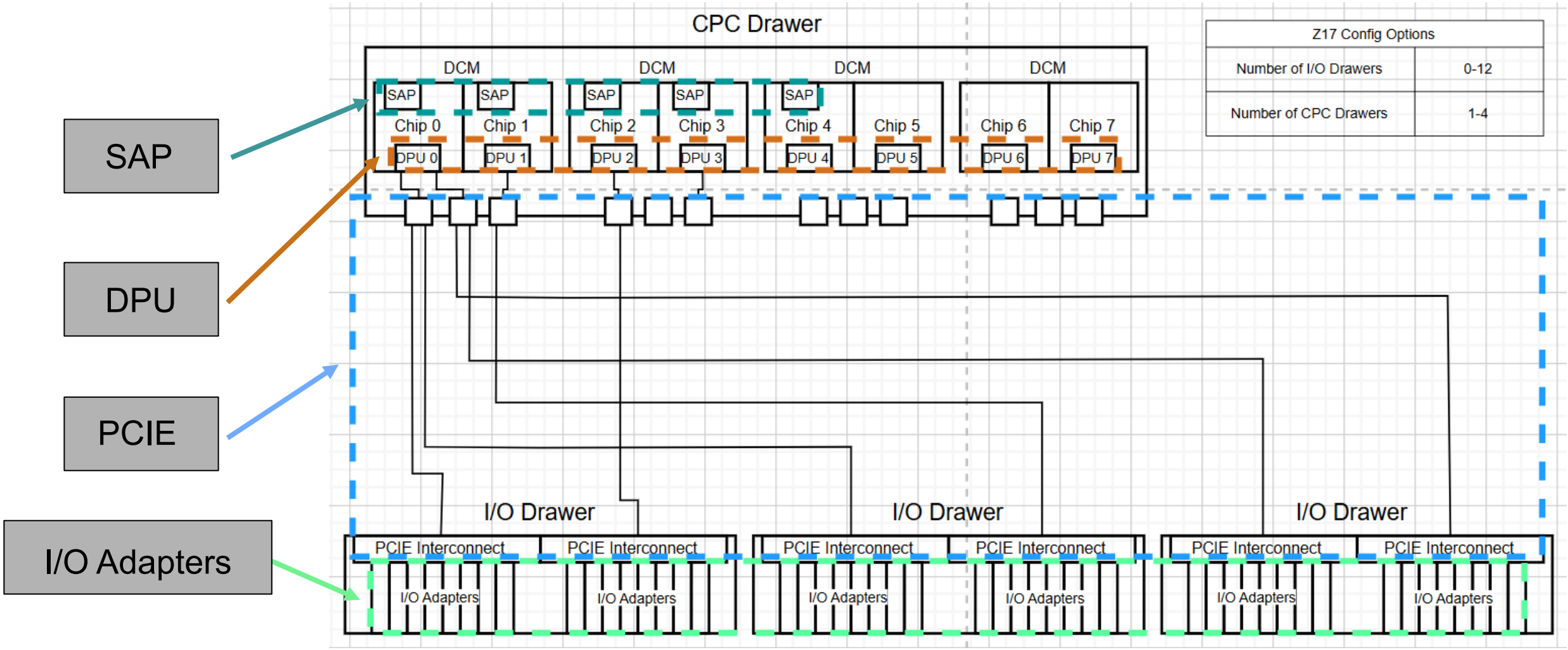

Sample z17 I/O drawer Configuration

z17 Channel Components - SAP

SAP

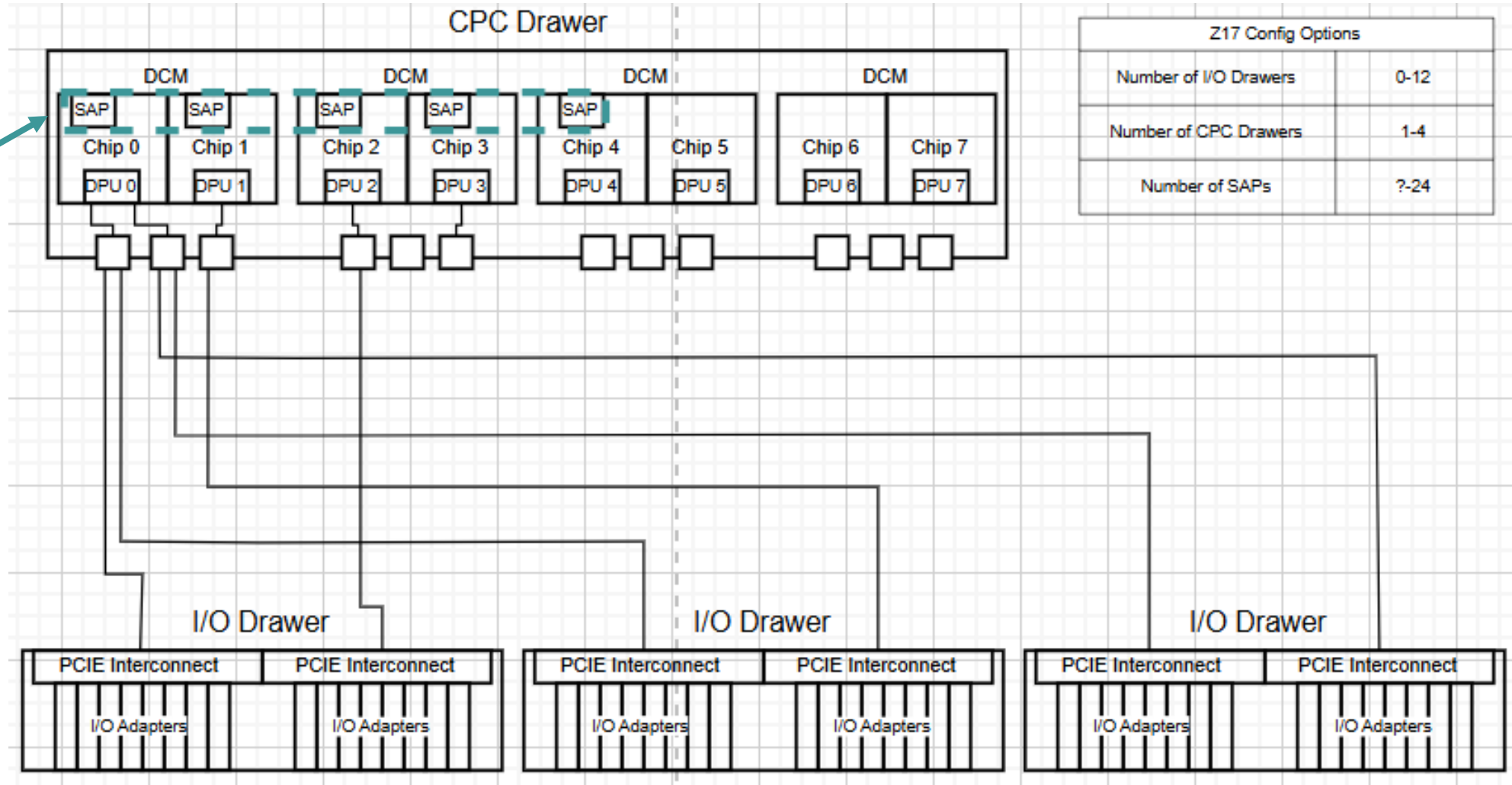

Z17 Config Options	
Number of I/O Drawers	0-12
Number of CPC Drawers	1-4
Number of SAPs	?-24

Note:

Additional SAPs beyond standard configuration may NOT be allocated on the z17

Sample z17 I/O drawer Configuration

z17 Channel Components – SAP

Description

- Processor configured to run the Channel Subsystem Licensed Internal Code and controls I/O operations

Relevant Performance Details

- SAPs are not utilized by channels using the QDIO/EQDIO protocols
  - OSAs in QDIO mode
  - Network Express Adapters in OSH mode
  - Ficon Express in FCP mode
- SAPs share the total workload amongst themselves

Notes:

SAP – System Assist Processor

There are some minor exceptions where SAP workload is not shared

Report: ESAIOP

I/O Proc Nmbr	<Pct Util> Busy	Idle	<Rate/Second> SSCH	Intrpts	<-Percent of Strts busy--> Chan	Switch	CtlUnit	Device
0	5.2	94.8	8213	16152	0.0	0	0	0
1	2.1	97.9	8213	163	0	0	0	0
2	5.9	94.1	8214	16605	0.0	0	0	0
3	1.8	98.2	8213	172	0	0	0	0
4	6.3	93.7	8213	20014	0	0	0	0
5	1.8	98.2	8213	182	0	0	0	0
6	3.7	96.3	8214	8191	0	0	0	0
7	1.7	98.3	8213	96	0	0	0	0
8	7.5	92.5	8214	23119	0	0	0	0
9	1.7	98.3	8213	113	0	0	0	0
10	8.1	91.9	8213	20384	0	0	0	0
11	2.3	97.7	8214	118	0	0	0	0
12	7.9	92.1	8214	16308	0.0	0	0	0
13	2.3	97.7	8213	210	0.0	0	0	0
14	5.9	94.1	8213	13491	0.0	0	0	0
15	2.2	97.8	8213	209	0.0	0	0	0
16	8.4	91.6	8213	22863	0.0	0	0	0
17	2.5	97.5	8213	213	0	0	0	0
18	4.4	95.6	8213	8253	0.0	0	0	0
19	2.3	97.7	8213	86	0	0	0	0
20	6.8	93.2	8213	16016	0	0	0	0
21	2.2	97.8	8214	150	0.0	0	0	0
22	6.7	93.3	8213	16512	0.0	0	0	0
23	2.4	97.6	8214	169	0.0	0	0	0
24	6.8	93.2	8214	14858	0.0	0	0	0
25	2.1	97.9	8214	168	0.0	0	0	0
26	8.6	91.4	8214	20623	0.0	0	0	0
27	2.3	97.7	8214	143	0.0	0	0	0
28	7.2	92.8	8214	20537	0.0	0	0	0
29	2.3	97.7	8213	152	0.0	0	0	0

Report displaying, I/O Processor Metrics by Processor Number

z17 Channel Components – SAP

How will a bottleneck look?

- High number of channels in FICON mode
- Smaller I/O block sizes
- High AVERAGE SAP utilization

Interpreting the associated report…

Note:

Each physical SAP is represented by 2 logical processors as a result of SMT

Report: ESAIOP

I/O Proc Nmbr	<Pct Util> Busy	Idle	<Rate/Second> SSCH	Intrpts	<-Percent of Strts busy--> Chan	Switch	CtlUnit	Device
0	5.2	94.8	8213	16152	0.0	0	0	0
1	2.1	97.9	8213	163	0	0	0	0
2	5.9	94.1	8214	16605	0.0	0	0	0
3	1.8	98.2	8213	172	0	0	0	0
4	6.3	93.7	8213	20014	0	0	0	0
5	1.8	98.2	8213	182	0	0	0	0
6	3.7	96.3	8214	8191	0	0	0	0
7	1.7	98.3	8213	96	0	0	0	0
8	7.5	92.5	8214	23119	0	0	0	0
9	1.7	98.3	8213	113	0	0	0	0
10	8.1	91.9	8213	20384	0	0	0	0
11	2.3	97.7	8214	118	0	0	0	0
12	7.9	92.1	8214	16308	0.0	0	0	0
13	2.3	97.7	8213	210	0.0	0	0	0
14	5.9	94.1	8213	13491	0.0	0	0	0
15	2.2	97.8	8213	209	0.0	0	0	0
16	8.4	91.6	8213	22863	0.0	0	0	0
17	2.5	97.5	8213	213	0	0	0	0
18	4.4	95.6	8213	8253	0.0	0	0	0
19	2.3	97.7	8213	86	0	0	0	0
20	6.8	93.2	8213	16016	0	0	0	0
21	2.2	97.8	8214	150	0.0	0	0	0
22	6.7	93.3	8213	16512	0.0	0	0	0
23	2.4	97.6	8214	169	0.0	0	0	0
24	6.8	93.2	8214	14858	0.0	0	0	0
25	2.1	97.9	8214	168	0.0	0	0	0
26	8.6	91.4	8214	20623	0.0	0	0	0
27	2.3	97.7	8214	143	0.0	0	0	0
28	7.2	92.8	8214	20537	0.0	0	0	0
29	2.3	97.7	8213	152	0.0	0	0	0

Report displaying, I/O Processor Metrics by Processor Number

PROVEN PERFORMANCE

z17 Channel Components - DPU

DPU

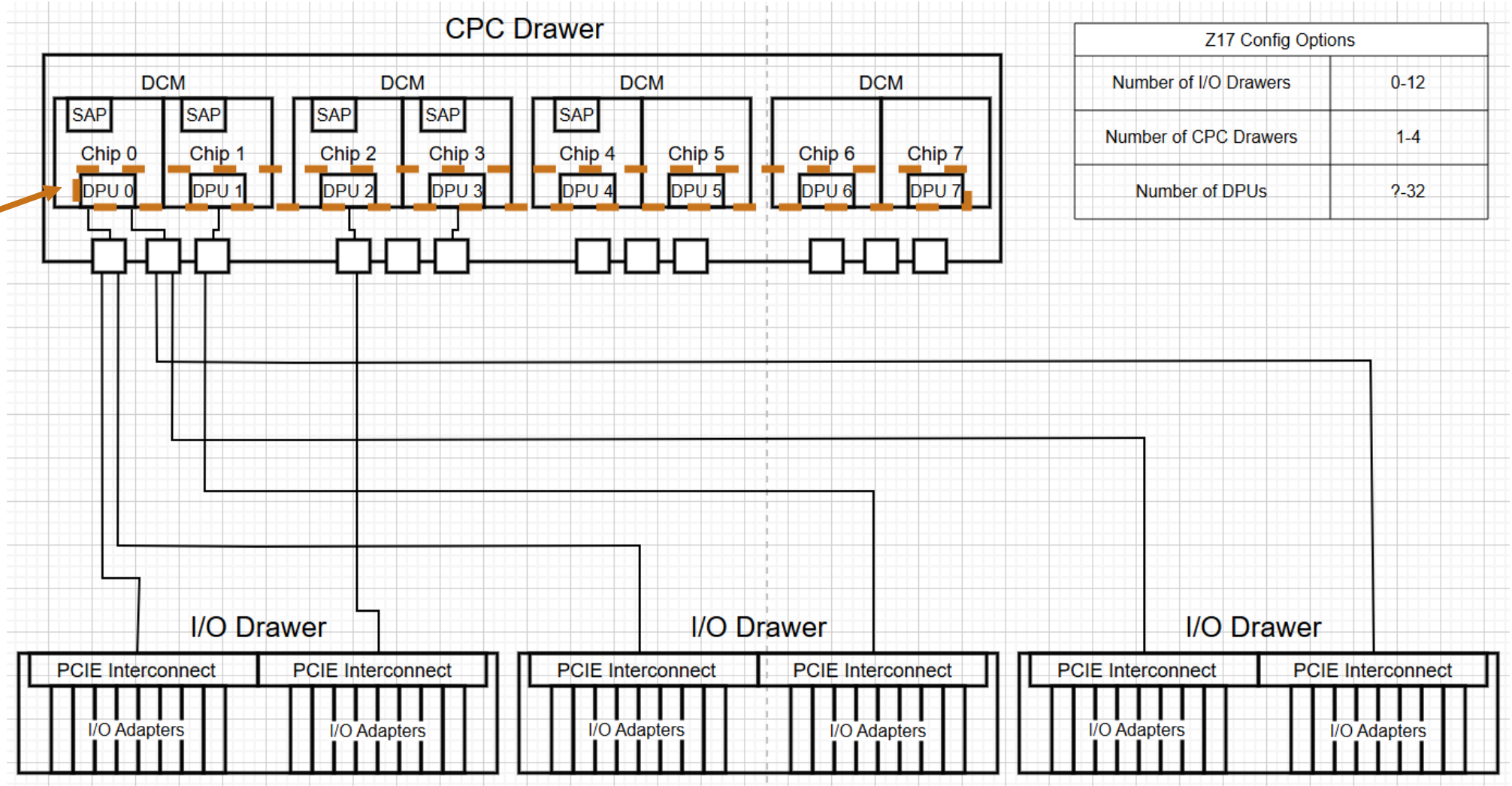

Z17 Config Options	
Number of I/O Drawers	0-12
Number of CPC Drawers	1-4
Number of DPUs	?-32

Sample z17 I/O drawer Configuration

z17 Channel Components - DPU

Description

- I/O processor responsible for packet construction, inspection and routing

Relevant Performance Details

- DPUs do NOT share compute with each other
- Each channel is processed by a single DPU
- DPU channel links determined by hardware configuration
- Each DPU can be linked to 128 Channels max
- The ONLY channels which use the DPU are the channels associated with the FICON Express 32-4p and the Network Express adapters

```
Report: ESACHAN
---------------------------------------
             <----DPU Util Pct----->
Time/   Chnl <-Channel-> <-Overall-> DPU
CHPID   Type LPAR  Total LPAR  Total Num
------  ---- ----- ----- ----- ----- ---
06:02:00
20       FCS 0.000 0.005 0.003 0.064  22
21       FCS 0.000 0.005 0.002 0.045  30
22       FCS 0.000 0.005 0.003 0.064  22
23       FCS 0.000 0.005 0.002 0.044  30
24       FCS 0.000 0.005 0.003 0.064  22
25       FCS 0.000 0.005 0.002 0.045  30
26       FCS 0.000 0.005 0.003 0.064  22
27       FCS 0.000 0.005 0.002 0.045  30
C8       FCP     0 0.003     0 0.058  14
CA       FCP     .     .     .     .   .
CB       FCP     0 0.003     0 0.058  14
CD       FCP     0 0.003     0 0.064  22
E0       OSD     .     .     .     .   .
E1       OSD     .     .     .     .   .
E2       OSD     .     .     .     .   .
E3       OSD     .     .     .     .   .
E5       OSD     .     .     .     .   .
E7       OSD     .     .     .     .   .
E8       OSD     .     .     .     .   .
E9       OSD     .     .     .     .   .
------ ----- ----- ----- ----- ----- ---
Totals FICON 0.002 0.042 0.020     .   .
Totals   FCP     0 0.036     0     .   .
Totals   OSA     0     0     0     .   .
```

Report displaying DPU utilization by CHPID and total DPU utilization

35 YEARS OF PERFORMANCE MANAGEMENT
VELOCITY SOFTWARE
PROVEN PERFORMANCE

z17 Channel Components - DPU

How will a bottleneck look?

- High number of Ficon Express 32-4P/Network Express adapters linked to a given DPU
- Smaller I/O block sizes
- Heavy use of non-zHPF operations
- A single overutilized DPU

Interpreting the associated report…

Report: ESACHAN

Time/ CHPID	Chnl Type	<----DPU Util Pct-----> <-Channel-> LPAR	Total	<-Overall-> LPAR	Total	DPU Num
06:02:00						
20	FCS	0.000	0.005	0.003	0.064	22
21	FCS	0.000	0.005	0.002	0.045	30
22	FCS	0.000	0.005	0.003	0.064	22
23	FCS	0.000	0.005	0.002	0.044	30
24	FCS	0.000	0.005	0.003	0.064	22
25	FCS	0.000	0.005	0.002	0.045	30
26	FCS	0.000	0.005	0.003	0.064	22
27	FCS	0.000	0.005	0.002	0.045	30
C8	FCP	0	0.003	0	0.058	14
CA	FCP	.	.	.	.	.
CB	FCP	0	0.003	0	0.058	14
CD	FCP	0	0.003	0	0.064	22
E0	OSD	.	.	.	.	.
E1	OSD	.	.	.	.	.
E2	OSD	.	.	.	.	.
E3	OSD	.	.	.	.	.
E5	OSD	.	.	.	.	.
E7	OSD	.	.	.	.	.
E8	OSD	.	.	.	.	.
E9	OSD	.	.	.	.	.
Totals	FICON	0.002	0.042	0.020	.	.
Totals	FCP	0	0.036	0	.	.
Totals	OSA	0	0	0	.	.

Report displaying DPU utilization by CHPID and total DPU utilization

z17 Channel Components - DPU

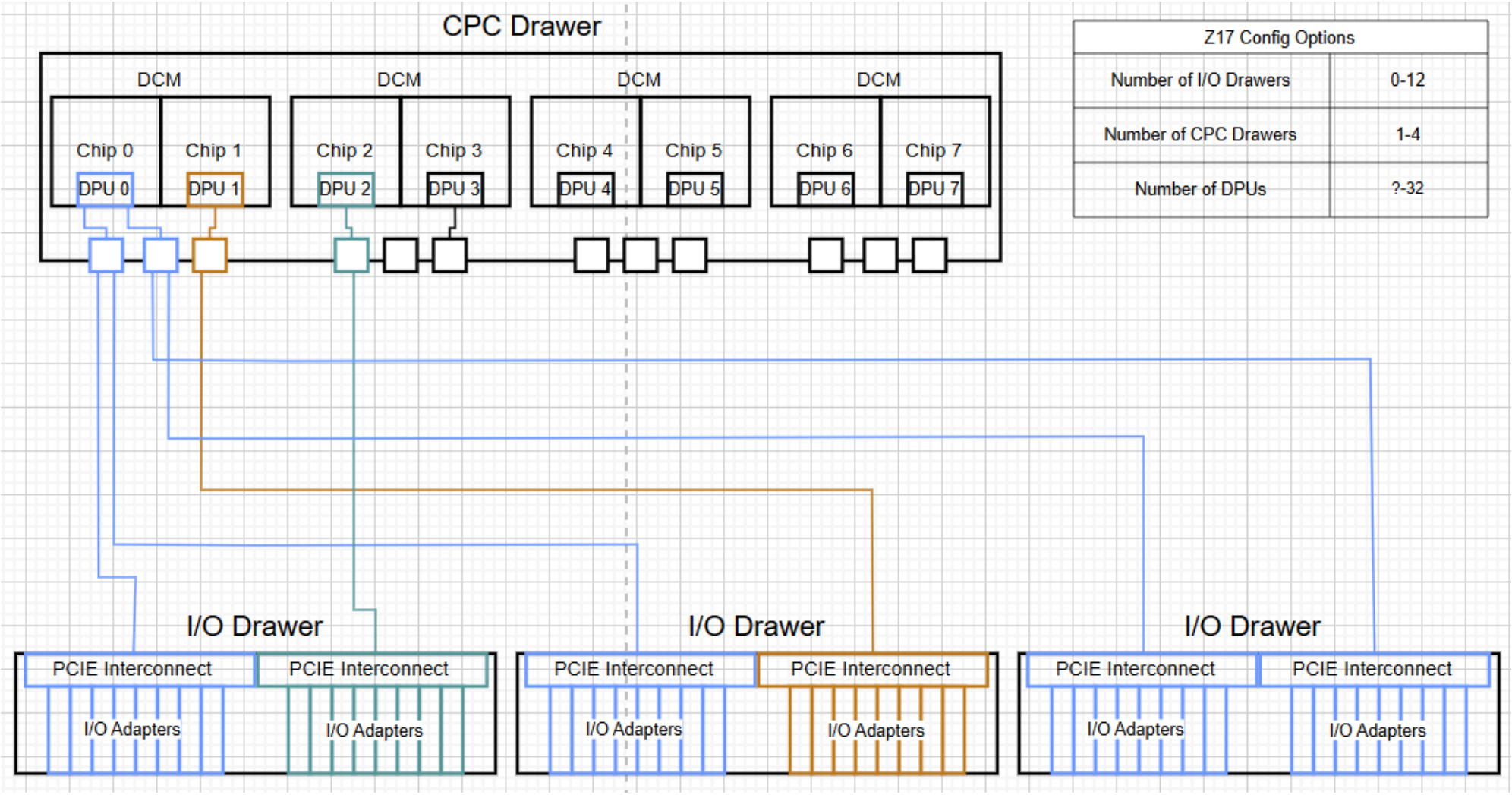

Z17 Config Options	
Number of I/O Drawers	0-12
Number of CPC Drawers	1-4
Number of DPUs	?-32

Sample z17 I/O drawer Configuration

z17 Channel Components – I/O Adapter

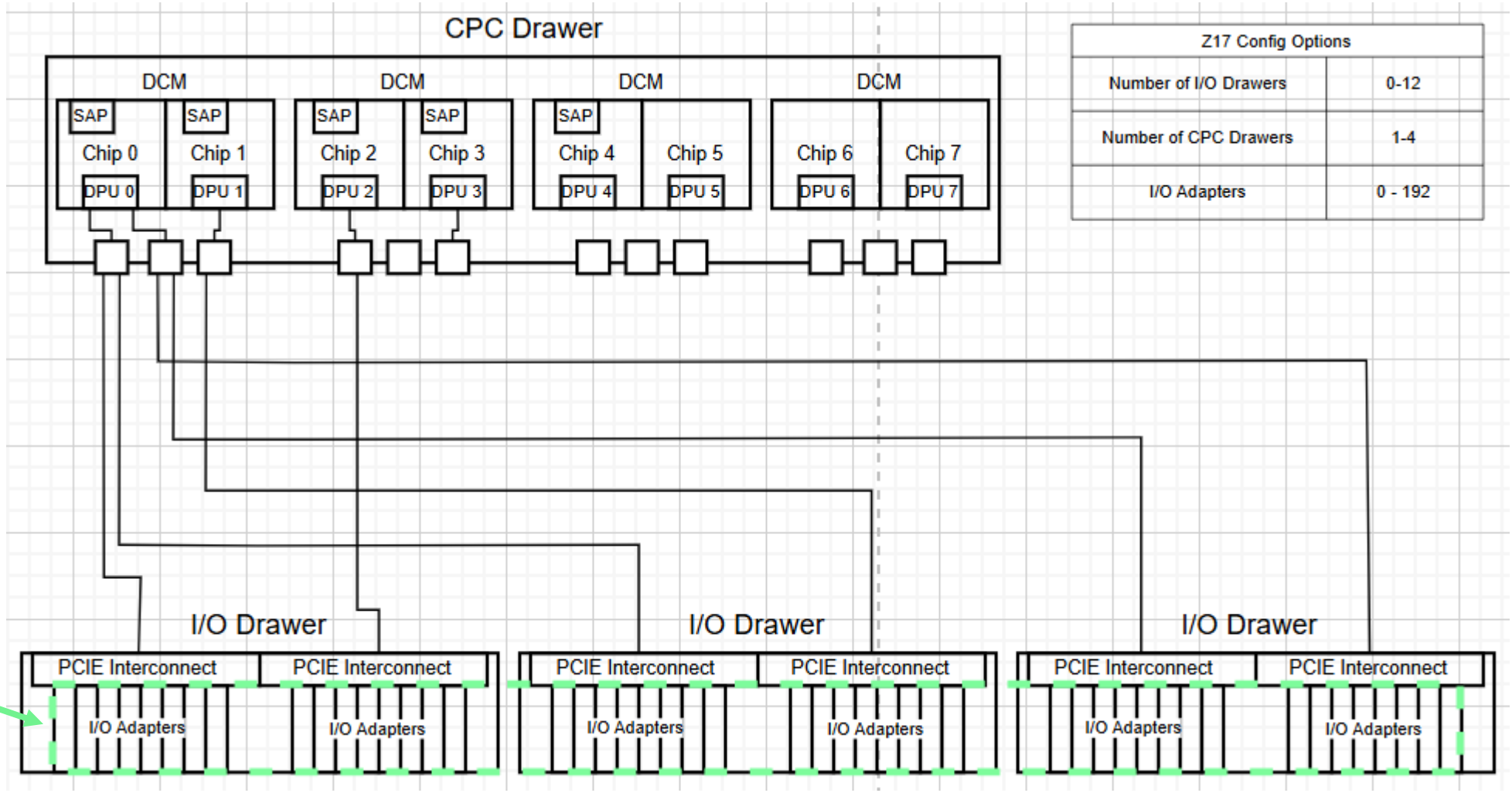

Z17 Config Options	
Number of I/O Drawers	0-12
Number of CPC Drawers	1-4
I/O Adapters	0 - 192

I/O Adapters

Sample z17 I/O drawer Configuration

z17 Channel Components/Metrics – I/O Adapter

Description

- Facilitates data transfer between the mainframe box and outside networks/devices

Relevant Performance Details

- Maximum reads/writes is based on I/O Adapter model
- Separate maximums for read and write

Note:
Maximum reads/writes may be negotiated down

Report: ESACHAN

Time/ CHPID	Chnl Type	<-Reads/Sec-> LPAR	Totl	Pct	<Writes/Sec-> LPAR	Totl	Pct
15:45:							
18	OSD	0	3757	0.2	0	9062	0.6
1A	OSD	0	3621	0.2	0	954	0.1
1B	OSD	0	3859	0.2	0	8900	0.5
1C	OSD	0	4033	0.2	0	8771	0.5
1D	OSD	4170	16K	1.0	2225	13K	0.8
1E	OSD	3872	29K	1.8	3961	21K	1.3
37	OSD	0	196	0.0	0	167	0.0
38	OSD	0	170	0.0	0	158	0.0
3C	OSD	651	651	0.1	809	809	0.1
67	FCS	3	1781	0.1	207	5881	0.4
69	FCP	514	514	0.0	1299	1299	0.1
6C	FCP	513	513	0.0	1300	1300	0.1
7A	FCS	3	35	0.0	232	799	0.1
8C	FCP	201K	201K	12	4687	4687	0.3
8D	FCP	513	513	0.0	1301	1301	0.1
Totals	FICON	7	1816	0.1	439	6680	0.4
Totals	FCP	203K	203K	12	8588	8588	0.5
Totals	OSA	9900	63K	10	7653	64K	3.9

Report displaying, I/O Control Unit Read/Write Utilization by CHPID

PROVEN PERFORMANCE

z17 Channel Components/Metrics – I/O Adapter

How will a bottleneck look?

- External network limitations
- Older adapters
- Overutilization of either a channel's reads or writes or both

Interpreting the associated report…

Note:
Max reads/writes may be seen in the ESACHNC report

Report: ESACHAN

Time/ CHPID	Chnl Type	<-Data Units-> <-Reads/Sec-> LPAR	Totl	Pct	<Writes/Sec-> LPAR	Totl	Pct
15:45:							
18	OSD	0	3757	0.2	0	9062	0.6
1A	OSD	0	3621	0.2	0	954	0.1
1B	OSD	0	3859	0.2	0	8900	0.5
1C	OSD	0	4033	0.2	0	8771	0.5
1D	OSD	4170	16K	1.0	2225	13K	0.8
1E	OSD	3872	29K	1.8	3961	21K	1.3
37	OSD	0	196	0.0	0	167	0.0
38	OSD	0	170	0.0	0	158	0.0
3C	OSD	651	651	0.1	809	809	0.1
67	FCS	3	1781	0.1	207	5881	0.4
69	FCP	514	514	0.0	1299	1299	0.1
6C	FCP	513	513	0.0	1300	1300	0.1
7A	FCS	3	35	0.0	232	799	0.1
8C	FCP	201K	201K	12	4687	4687	0.3
8D	FCP	513	513	0.0	1301	1301	0.1
Totals	FICON	7	1816	0.1	439	6680	0.4
Totals	FCP	203K	203K	12	8588	8588	0.5
Totals	OSA	9900	63K	10	7653	64K	3.9

Report displaying, I/O Control Unit Read/Write Utilization by CHPID

z17 Channel Components

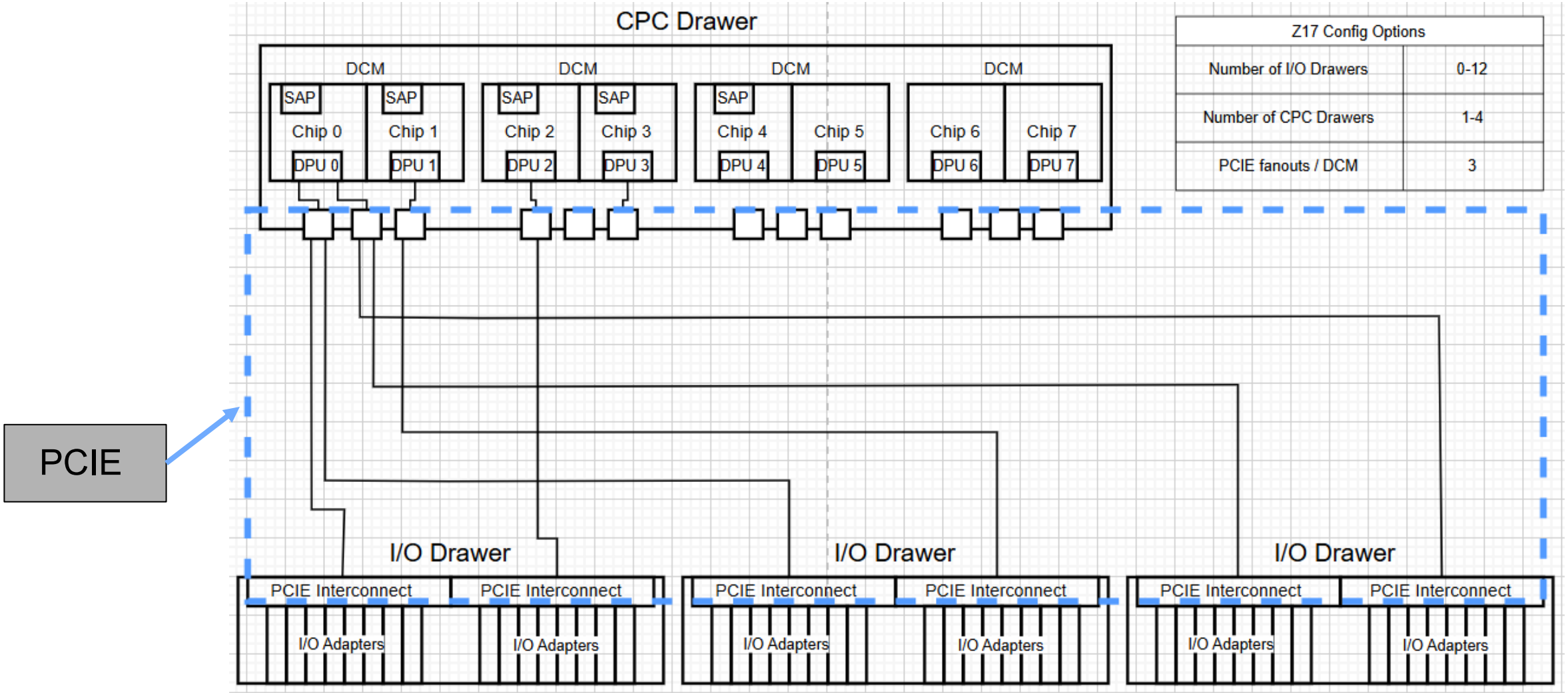

Sample z17 I/O drawer Configuration

z17 Channel Components - PCIE

Description

- Expansion bus connecting chips on the CPC drawer to devices (I/O adapters) on the I/O drawer

Relevant Performance Details

- PCIEs have 1 set of wires transmitting data and 1 set of wires for receiving data
- Typically, not overutilized

```
Report: ESACHAN
---------------------
             <Bus Cy>
Time/   Chnl <cl/Sec>
CHPID   Type Used Pct
------  ---- ---- ---
12:24:
70       OSD    .   .
71       OSD    .   .
80       OSD    .   .
84       OSD    .   .
86       OSD    .   .
C1       FCS  17K 0.5
C3       FCS  83K 2.7
C6       FC   83K 2.7
C7       FCS  17K 0.5
C9       FCS  83K 2.7
CB       FCS  17K 0.5
CD       FCS  84K 2.7
CE       FCS  83K 2.7
CF       FCS  17K 0.5
------ ----- ---- ---
Totals FICON 484K  15
Totals   OSA    0   0
```

Report displaying PCIE bus cycle utilization by CHPID

z17 Channel Components - PCIE

How will a bottleneck look?

- Overutilization of either data transmitted or received or both

Interpreting the associated report…

```
Report: ESACHAN
--------------------
                <Bus Cy>
Time/    Chnl <cl/Sec>
CHPID    Type Used Pct
------   ---- ---- ---
12:24:
70        OSD    .   .
71        OSD    .   .
80        OSD    .   .
84        OSD    .   .
86        OSD    .   .
C1        FCS   17K 0.5
C3        FCS   83K 2.7
C6        FC    83K 2.7
C7        FCS   17K 0.5
C9        FCS   83K 2.7
CB        FCS   17K 0.5
CD        FCS   84K 2.7
CE        FCS   83K 2.7
CF        FCS   17K 0.5
------ ----- ---- ---
Totals FICON 484K  15
Totals   OSA    0   0
```

Note:

Bus utilization metrics are not produced for OSAs even though OSAs DO utilize the PCIE

Report displaying PCIE bus cycle utilization by CHPID

35 YEARS OF PERFORMANCE MANAGEMENT
VELOCITY SOFTWARE
PROVEN PERFORMANCE

So, what do you do when there is a channel problem?

Thank you for listening!

Questions?

Tyler Rossi

Software Engineer / Performance Apprentice
tyler@velocitysoftware.com

New Education

Exciting News!!
Velocity Software is now your place for z/VM education!

- Self-Study and Instructor-led classes
- Upcoming Instructor-led Class:
  - July 8-10 2026 – Modules 1, 2 and 3 (from our education page)

Ask about it here at the workshop!
See our website – VelocitySoftware.com/Educate/Training
Send an email to – education@velocitysoftware.com